

Product model: HPM4119

Φ19mm Min-diameter Pressure Transmitter

Manufacturer: Nanjing Hangjia Electronic Technology Co., Ltd.

Product category: liquid level transmitter

Application: Water treatment industry, Groundwater, deep wells, Environmental protection industry, Marine use, Industrial process control

Overview

HPM4119 Mini-diameter liquid level transmitter is a fully sealed submersible structure, using high-quality and high-stability pressure sensors as a sensing element. This product is designed with a diameter of 19mm Slim probe makes it suitable for particularly small inlets and can be used in a wide range for measuring the level and depth of water and wastewater, in groundwater, deep Wells, lift stations, above ground tanks and stock tanks etc.

The shell of the product adopts a fully welded process, and the connections of the shell, cables and other links are all designed to be reliably sealed. It also adopts a full potting process to ensure that the product has a long service life. It can be widely used in groundwater detection, deep well liquid level measurement, water treatment, industrial process control and many other occasions.

Features

- Φ19mm mini diameter, easy to install.
- High accuracy till 0.1%F.S.
- Good stability with full temperature range digital compensation
- Whole welded structure
- Wider measuring range, from 1m to 350m
- Double anti-condensation and condensation design
- Multiple protection structure design, IP68 supported.

Technical Parameters

Pressure Range	0 ~ 10kPa...3.5MPa 0~1...350mH2O Note: The measurement unit can be converted into ftH2O@4℃, inH2O@4℃, m, mm, etc. Need to give the density value of the measuring medium when the unit is m, mm, etc.
Overload	1.5 times pressure range of full scale
Measuring Medium	Various liquids compatible with contact materials
Output Signal/ Power Supply	2-wire 4~20mADC/Vs=10~30 VDC 3-wire 0~10V/Vs=12~30 VDC 3-wire 0~5V/Vs=10~30 VDC 3-wire 0.25~1.25V、0.5~2.5V/Vs=2.8~5.5VDC
Accuracy	±0.25%FS(typical), ±0.1%FS(optional)
Long-term Stability	±0.2%FS(Reference 25℃,typical); ±0.1%FS(Reference 25℃,optional)
Response time	about 1ms
Compensation temperature range	0~70℃(typical) -20~85℃(optional) Note: Please consult the sales for measuring range≤35kPa
Temperature Coefficient of Zero	±1.5%FS(0～35kPa,0~70℃) ±1.0%FS(Other ranges, Reference 25℃, in compensation temperature range)
Temperature Coefficient of Full Scale	±1.5%FS(0～35kPa,0~70℃) ±1.0%FS(Other ranges, Reference 25℃, in compensation temperature range)
Operation Temperature	-40 ~ 80℃
Storage Temperature	-40 ~ 85℃
Medium Temperature	-40 ~ 80℃
Protection Grade	IP68
Reverse polarity protection	No damage, circuit does not work

EMC	Complies with EN 61326
Vibration	20g(20~5000Hz)
Impact resistance	20g(11ms)
Dielectric strength	500VAC 50Hz voltage, 1min
Insulation resistance	>100MΩ，500VDC

Structure Material

Code	Part	Notes
S4	Probe	304
S6		316L
M1	Sensor	silicon piezoresistive, 316L
FK	O ring	FKM (-20~200℃)
NB		NBR (-40~120℃)
C2U	Cable	PU jacket, outer diameter Φ(7.2±0.2)mm
C2N		NBR jacket, outer diameter Φ(7.2±0.2)mm

Structure Drawings(Unit:mm)

Probe

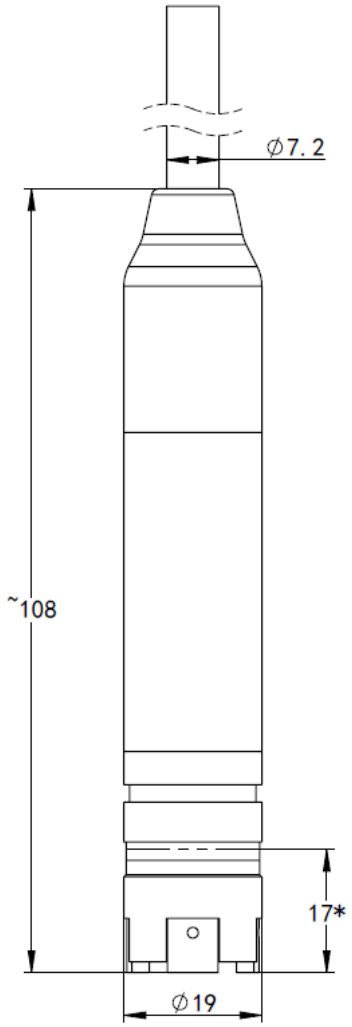

* This is the distance from the sensing diaphragm to the bottom

Threaded Mounting Parts (Code: W1)

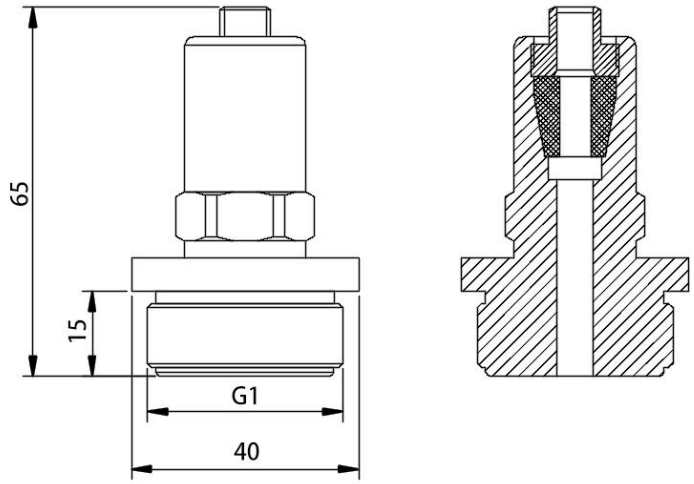

1. Used to fix the entire product at the top
2. Except for G1 thread, other threads can be customized if required

Weight ~450g

Cable clip(Code:W8)

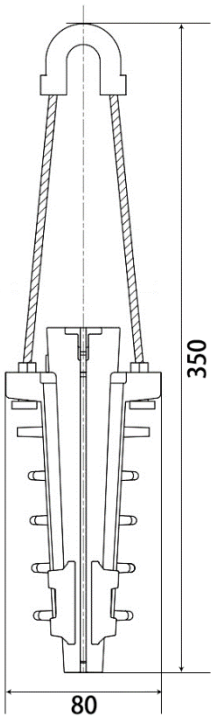

Used to fix the entire product at the top

Weight ~340g

Installation

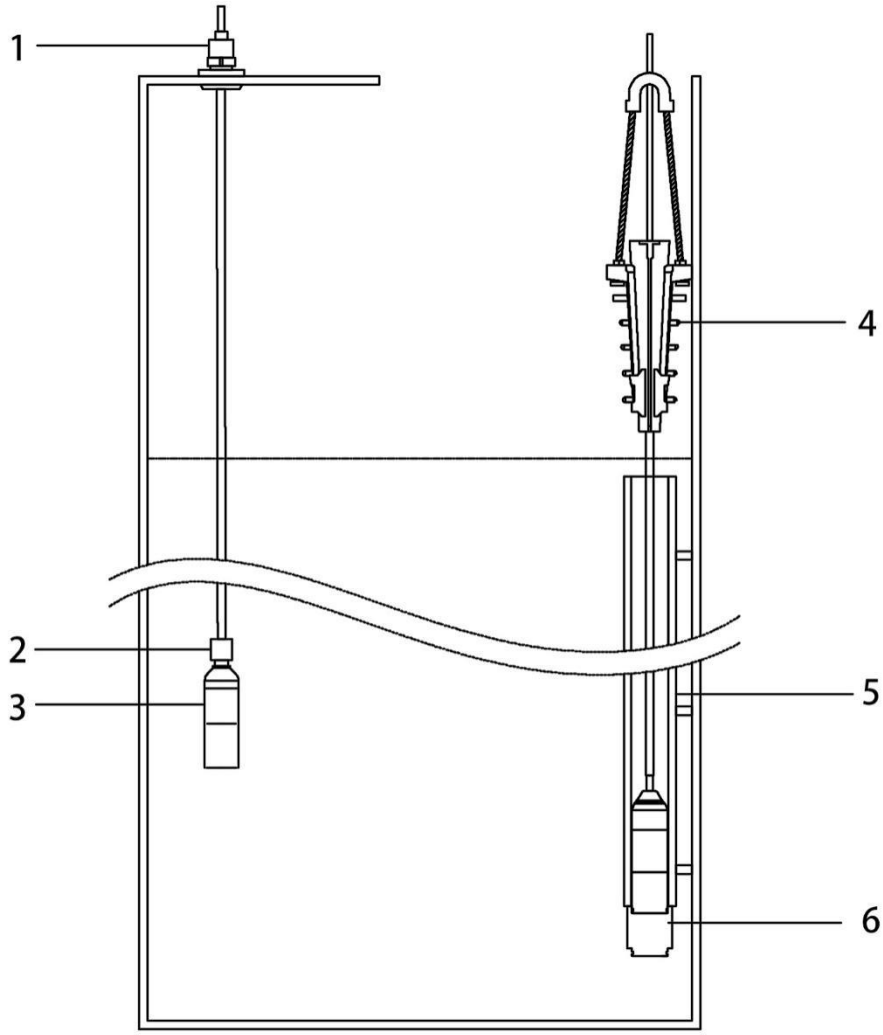

1. Threaded Mounting Parts(W1)
2. Top connection heavy hammer(W2)
3. Level transmitter
4. Cable clip(W8)
5. Protective tube
6. Bottom connection heavy hammer(W3)

Notes：If heavy hammer in bottom, need to consider the influence of the height of the bottom hammer on the height from the sensing diaphragm to the bottom of the measurement medium.

Electrical Connection

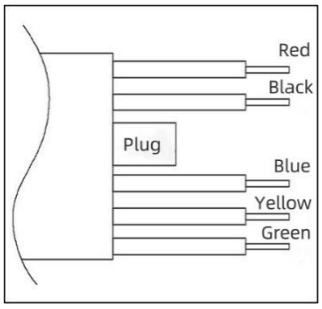

Wire color	4～20mA 2-wire	Voltage 3-wire
Red	Power supply+（+V）	Power supply+（+V）
Black	Power supply-（0V/+OUT）	Common (GND)
Blue	-	Output+（+OUT）
Yellow	-	-
Green	-	-

⚠Gauge pressure products should refer to the current atmospheric pressure, and the breathable plug must be kept dry and prevented from falling off.

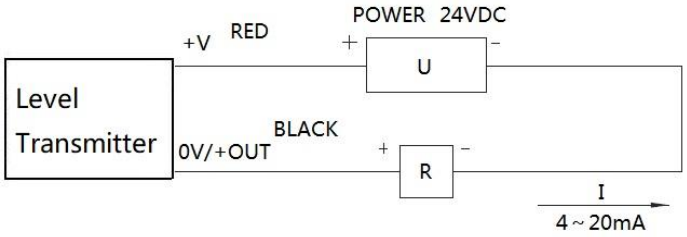

Electrical wiring diagram of 2-wire 4-20mADC output transmitter

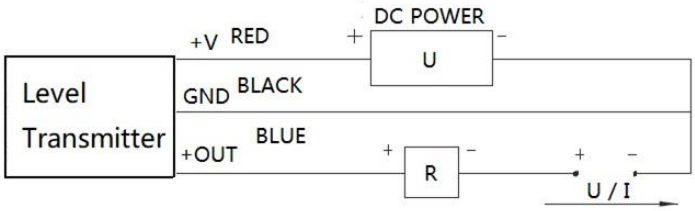

Electrical wiring diagram of 3-wire voltage output transmitter

Ordering Guide

Item NO.	Type						
HPM4119	Mini-diameter Level transmitter						
	Pressure Range	Measuring Range					
	[0 ~ X]mH$_2$O (Ln)	X is measuring range L is the length of cable					
		Code	Output Signal				
		B1	(4 ~ 20)mA				
		B4	(0 ~ 5)V				
			Code	Cable			
			C2N	NBR			
			C2U	PU			
				Code	Mounting Method		
				N	NA		
				W1	Threaded Mounting Parts		
				W2	Top connection heavy hammer		
				W3	Bottom connection heavy hammer		
				W8	Cable clip		
					Code	Sensor	
					M1	316L, silicon piezoresistive	
						Code	Proble Housing
						S4	304
						S6	316L
							Code / Others
							QF / Factory report
							FK / FKM sealing ring
							NB / NBR sealing ring
							Other customized requests
HPM4119	[0 ~ 5]mH2O (L7)	B1	C2U	N	M1	S4	

Certification Information

Certification organization	CQM
Quality management system	ISO 9001:2015
Certification scope	Research, development and manufacture of pressure transmitter and temperature transmitter
Certificate No.	00223Q21711R1S